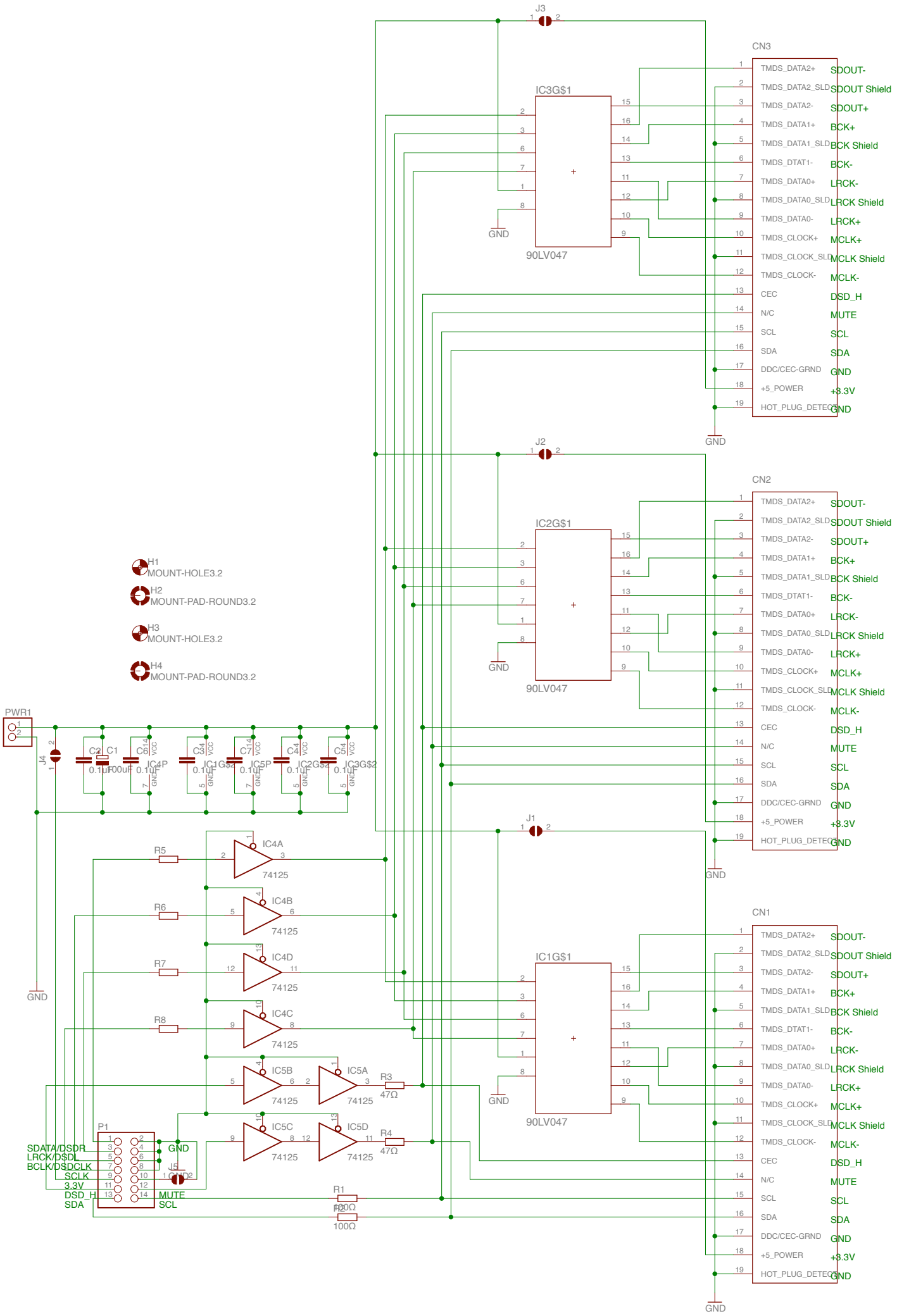
J3
CN3
IC3G$1
90LV047
GND
TMDS_DATA2+ SDOUT-
TMDS_DATA2_SLD SDOUT Shield
TMDS_DATA2- SDOUT+
TMDS_DATA1+ BCK+
TMDS_DATA1_SLD BCK Shield
TMDS_DTAT1- BCK-
TMDS_DATA0+ LRCK-
TMDS_DATA0_SLD LRCK Shield
TMDS_DATA0- LRCK+
TMDS_CLOCK+ MCLK+
TMDS_CLOCK_SLD MCLK Shield
TMDS_CLOCK- MCLK-
CEC DSD_H
N/C MUTE
SCL SCL
SDA SDA
DDC/CEC-GRND GND
+5_POWER +3.3V
HOT_PLUG_DETECT GND
J2
CN2
IC2G$1
90LV047
J1
CN1
IC1G$1
90LV047
H1 MOUNT-HOLE3.2
H2 MOUNT-PAD-ROUND3.2
H3 MOUNT-HOLE3.2
H4 MOUNT-PAD-ROUND3.2
PWR1
J4
C2 0.1uF
C1 100uF
C6 0.1uF
IC4P
C3 0.1uF
IC1G$2
C7 0.1uF
IC5P
C4 0.1uF
IC2G$2
C5 0.1uF
IC3G$2
R5
R6
R7
R8
IC4A
IC4B
IC4D
IC4C
IC5B
IC5A
IC5C
IC5D
74125
R3 47Ω
R4 47Ω
R1 100Ω
R2 100Ω
P1
J5
SDATA/DSDR
LRCK/DSDL
BCLK/DSDCLK
SCLK
3.3V
DSD_H
SDA
MUTE
SCL