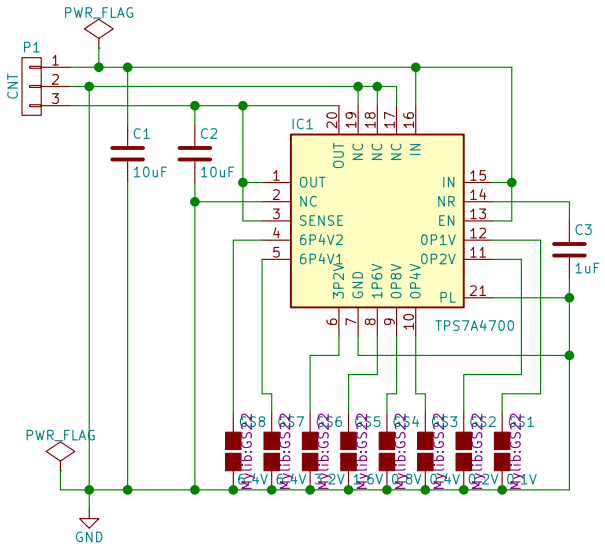

Sheet: /
File: PW6.sch

Title:

Size: A4	Date:	Rev:
KiCad E.D.A. kicad (2016-03-01 BZR 6238)-product		Id: 1/1